Instructions for Ballet Barre Assembly and Operation

Four-, Six-, Eight-, and Ten-Foot
Single or Double Sided Free-Standing Ballet Barre

YOU SHOULD HAVE:

For single-sided unit

- one Wood Barre in the length you purchased
- one large folding X-Brace
- two 41" long Uprights
- two 30" long Legs
- two 9" Extension Studs
- two large wing Nuts
- two square Nuts and two Washers
- four Bolts and four wing Nuts

For double-sided unit

- two Wood Barres in the length you purchased
- one large folding X-Brace
- two 41" long Uprights
- two 30" long Legs
- four 9" Extension Studs
- four large wing Nuts
- four square Nuts and four Washers
- four Bolts and four wing Nuts

SETTING UP THE BASE:

- Bolt on the two Legs to the two Uprights with the 3/8" bolts provided

- Unfold the X-Brace and fasten one end to the two studs on one Upright and the other end to the two studs on the other Upright with the small wing nuts provided

THE BASE SHOULD LOOK LIKE THIS:

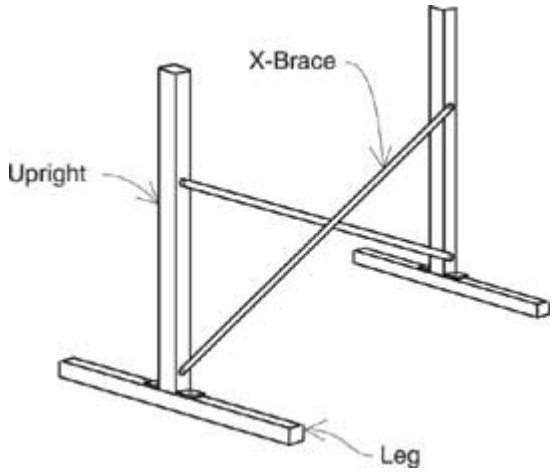

PUTTING THE BARRE ASSEMBLIES TOGETHER:

Screw the Extension Studs into the holes in the Wood Barres clockwise by hand until the shoulders touch the wood. An additional 1/2 turn may be necessary to straighten out the Extension Studs and make them all perpendicular to the Wooden Barre and parallel to each other. **USE CAUTION!!!! IF YOU SCREW THEM TOO MUCH, IT WILL**

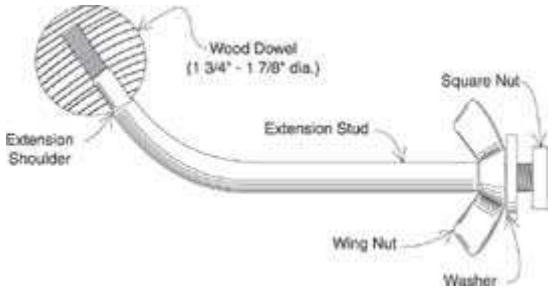

SPLIT THE WOOD!!!! Screw on Wing Nuts, Washers, and Square Nuts exactly as shown in illustration

MOUNTING BARRE ASSEMBLY:

Pick up bar assembly and slide the Square Nut, on the end of each Extension Stud, into the top slot of its corresponding Channel. (Washers and Wing Nuts are outside.) Tighten the wing Nuts when the barre is at your desired height. To adjust barre, loosen the wing Nut and slide it up and down the Channel, then retightens the Wing Nut. Grab the Wood Barre at the point where the Extension Stud screws in and wiggle the barre up and down when tightening and loosening the wing Nut.

ALSO AVAILABLE: 14' and 16' Free Standing Ballet Barres

1-661-273-8700
Email: sales@cartwheelfactory.com